ELK LIGHTING

PRODUCT SPECIFICATION SHEET

ITEM #:	32352/3
UPC	748119133096
Description	Collective 3-Light Island Light in Satin Brass with Clear Glass
Finish	Satin Brass
Materials	Glass, Steel
Brand	ELK Lighting
Collection	Collective
Category	Indoor Lighting
Type	Island Light

ITEM DIMENSIONS			
Width	42 inches		
Depth	10 inches		
Height	11 inches		
Weight	8 pounds		
ADDITIONAL DIMENSIONS			
Backplate / Canopy	5 diameter		
HCWO	N/A		
Min. Extension	N/A		
Max. Extension	N/A		
OVERALL HEIGHT			
Min.	14 inches	**Max.**	53 inches
EXTENSION ROD(S)			
Rods: 1-6, 1-12, 1-24			

RATINGS & SPECIFICATIONS			
Safety Rating	UL	**Certification**	Dry locations
ADA Compliant	N/A	**Voltage**	120
BULBS / SOCKETS			
Quantity	3	**Wattage**	60 watts
Included	No	**Type**	A19 (E26 Medium Base)
Other	N/A		
CHAIN / CORD INFORMATION			
Chain	N/A	**Cord**	72 inches - Clear
SHADE / GLASS DETAILS			
Shade/Glass Description	Clear glass		
Width	10 inches	**Height**	10 inches
Width at Top	N/A	**Width at Bottom**	N/A

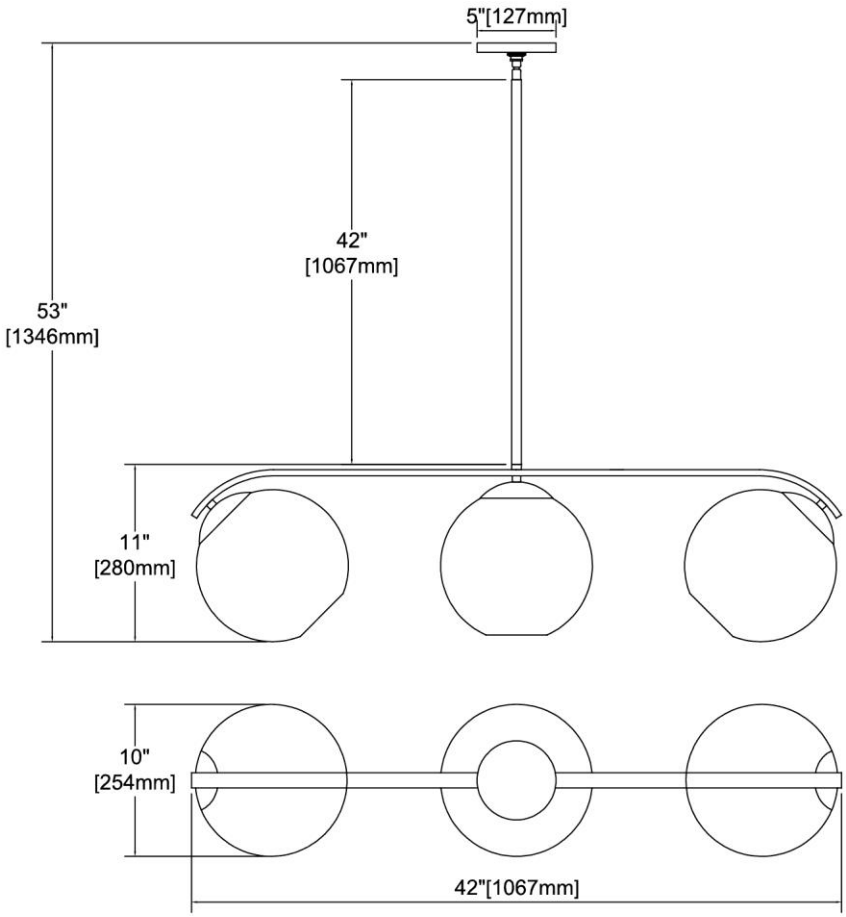

Rev. 5/13/2019